BBOX PLUTO H850_510 KV

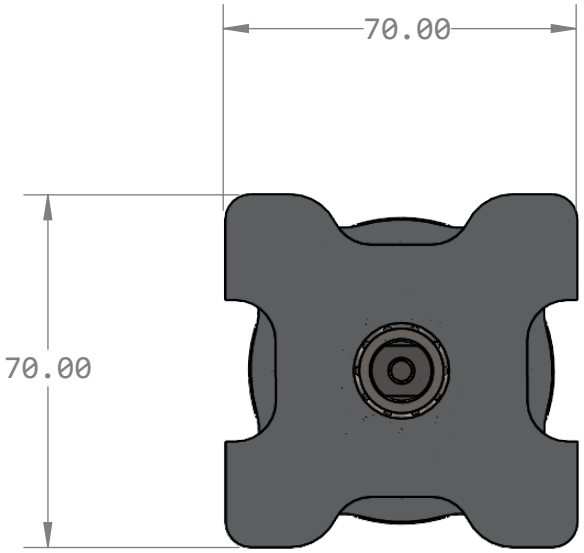

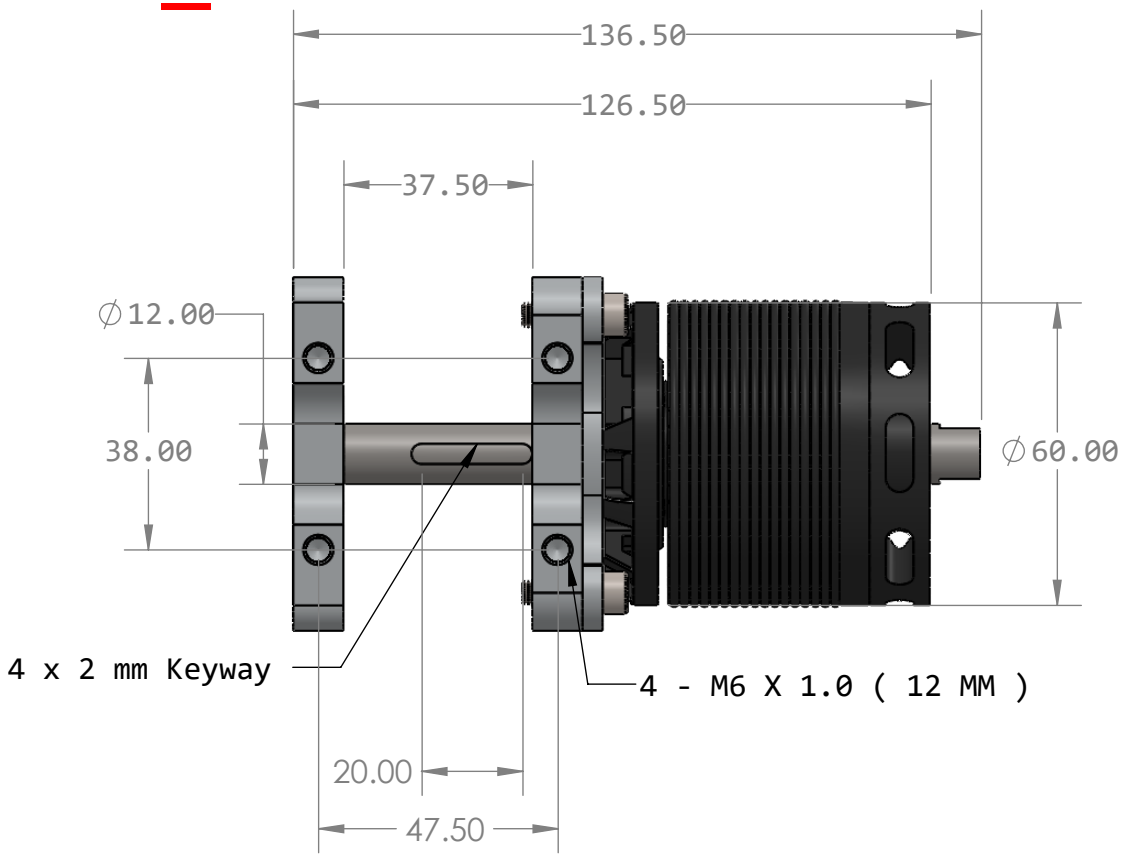

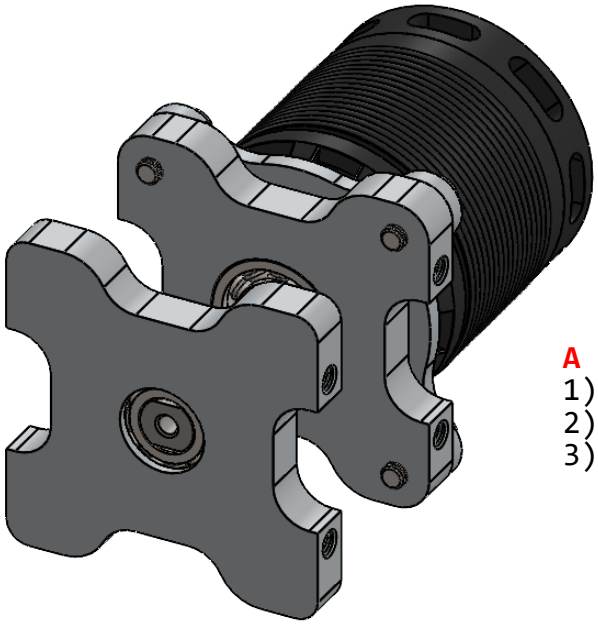

A Single Package Contain

1) 1 * H850 + Motor Mount
2) 1 * 4mm full length shaft key
3) 4 * M6*12 high tensile socket head screw

Model : BBOX PLUTO H850 Combat Series

Total Weight : 980 gram

Dimesnions : 136.50 * 70 * 70 mm

TECHNOBOTIX PVT LTD

www.technobotix.in